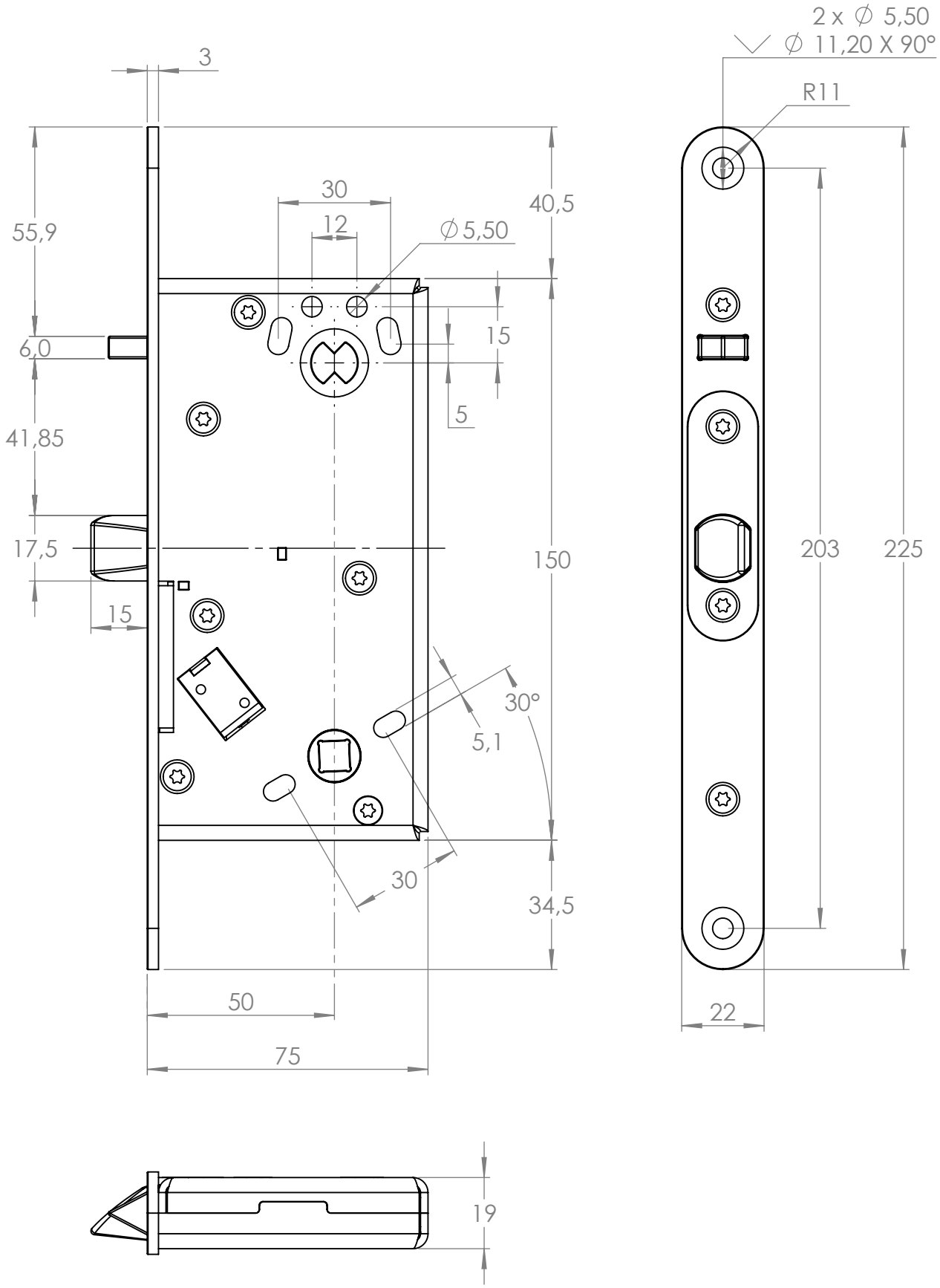

SCALE: 2:3

SAFE TRON ELECTRONIC LOCKS

Property of Safetron AB, Sweden.
This document contains proprietary information. Reproduction or use in any unauthorized way is prohibited without the express written consent of Safetron AB,Sweden.

This document is subject to change without notice

TITLE: SL620 "Modern"

Sales Drawing

Drawing No: Måttritning.2

Rev

A4

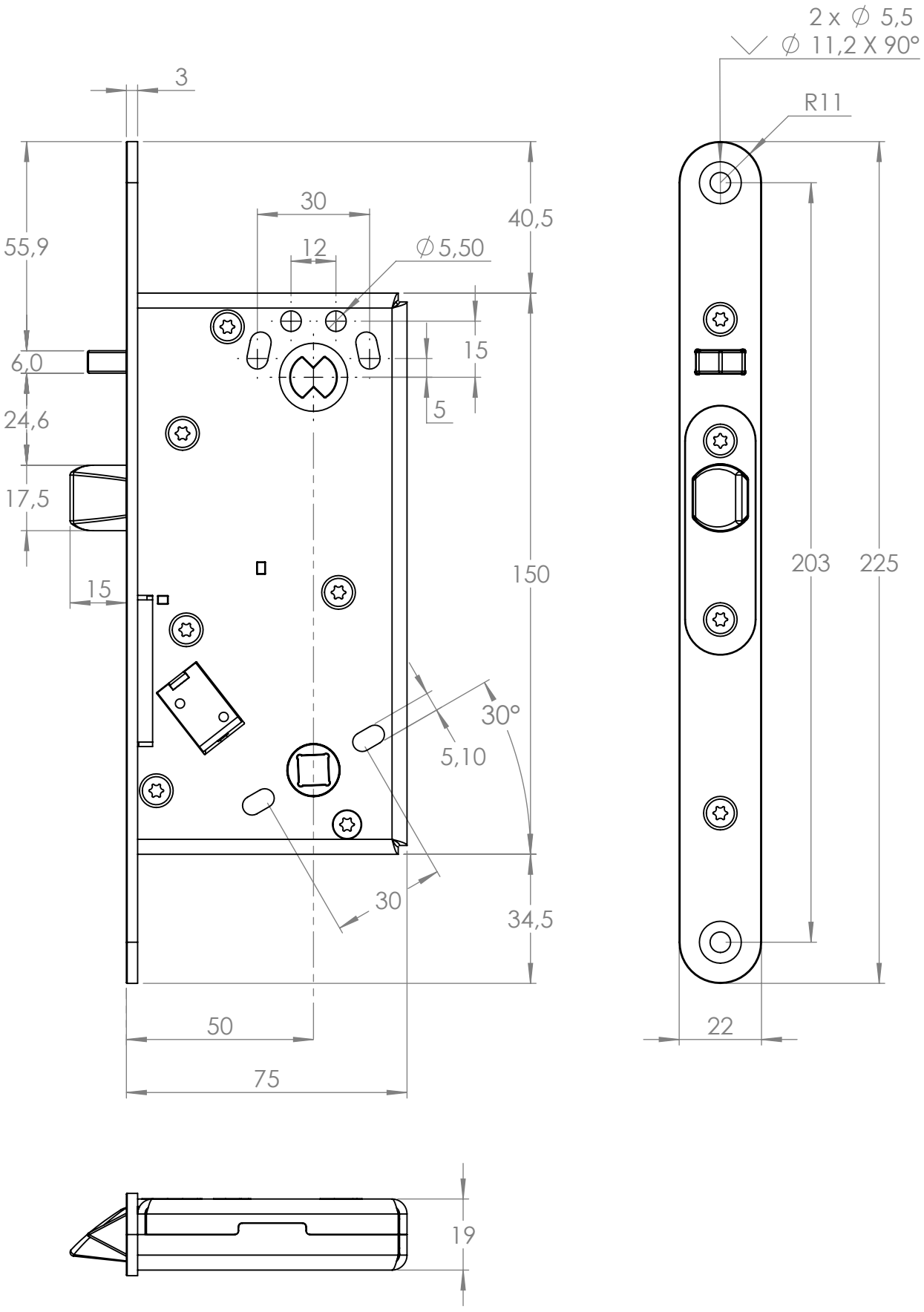

SCALE: 2:3

SAFE TRON ELECTRONIC LOCKS

Property of Safetron AB, Sweden.
This document contains proprietary information. Reproduction or use in any unauthorized way is prohibited without the express written consent of Safetron AB,Sweden.

This document is subject to change without notice

TITLE: SL620 "Classic"

Sales Drawing

Drawing No: Måttritning.1

Rev

A4

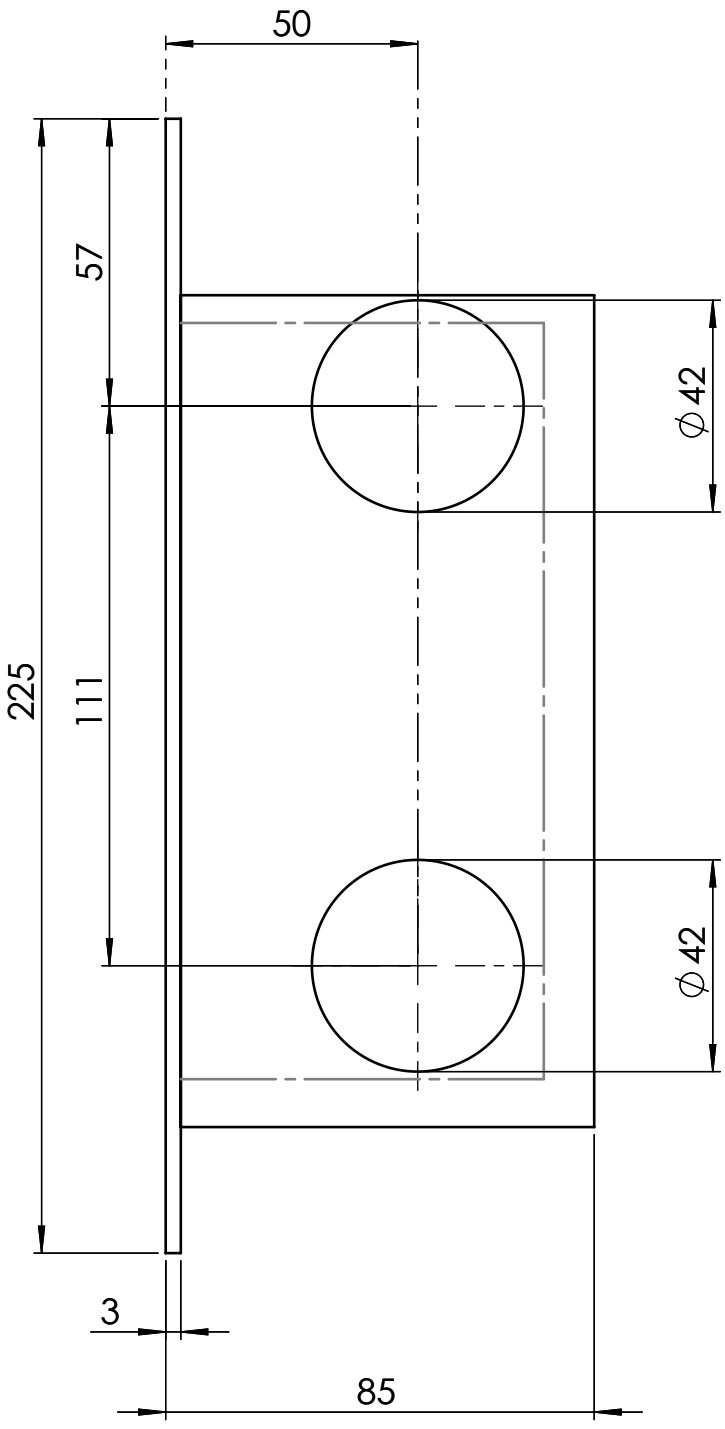

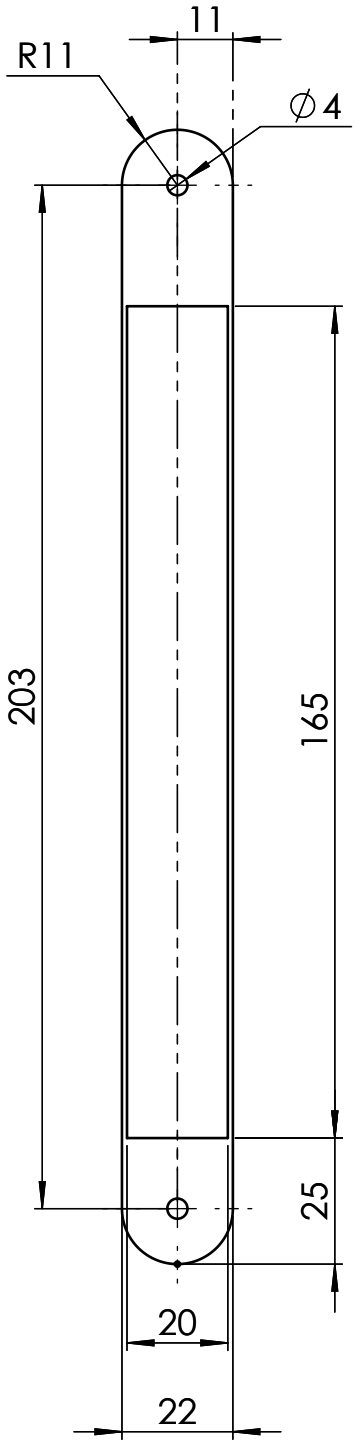

(Lock case depth 75 mm)

SCALE: 2:3

SAFE TRON ELECTRONIC LOCKS

Property of Safetron AB, Sweden.
This document contains proprietary information. Reproduction or use in any unauthorized way is prohibited without the express written consent of Safetron AB,Sweden.

This document is subject to change without notice

TITLE: SL620 - urtagsritning

Sales Drawing

Drawing No: Måttritning.3

Rev

A4

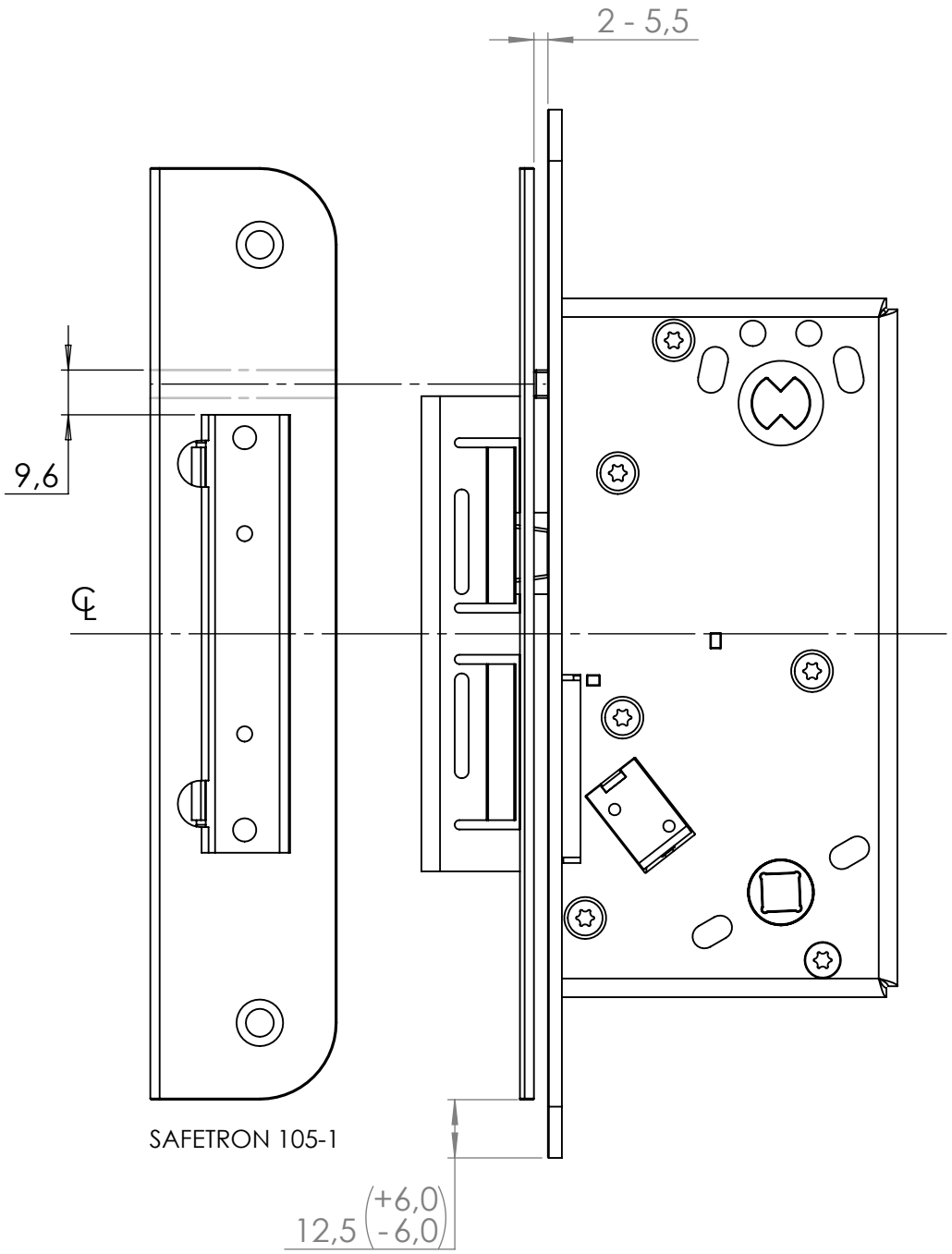

SCALE: 2:3

SAFE TRON ELECTRONIC LOCKS

Property of Safetron AB, Sweden.
This document contains proprietary information. Reproduction or use in any unauthorized way is prohibited without the express written consent of Safetron AB,Sweden.

This document is subject to change without notice

TITLE: SL620 - placering slutbleck

Sales Drawing

Drawing No: Måttritning.4

Rev

A4